Thule Xpress
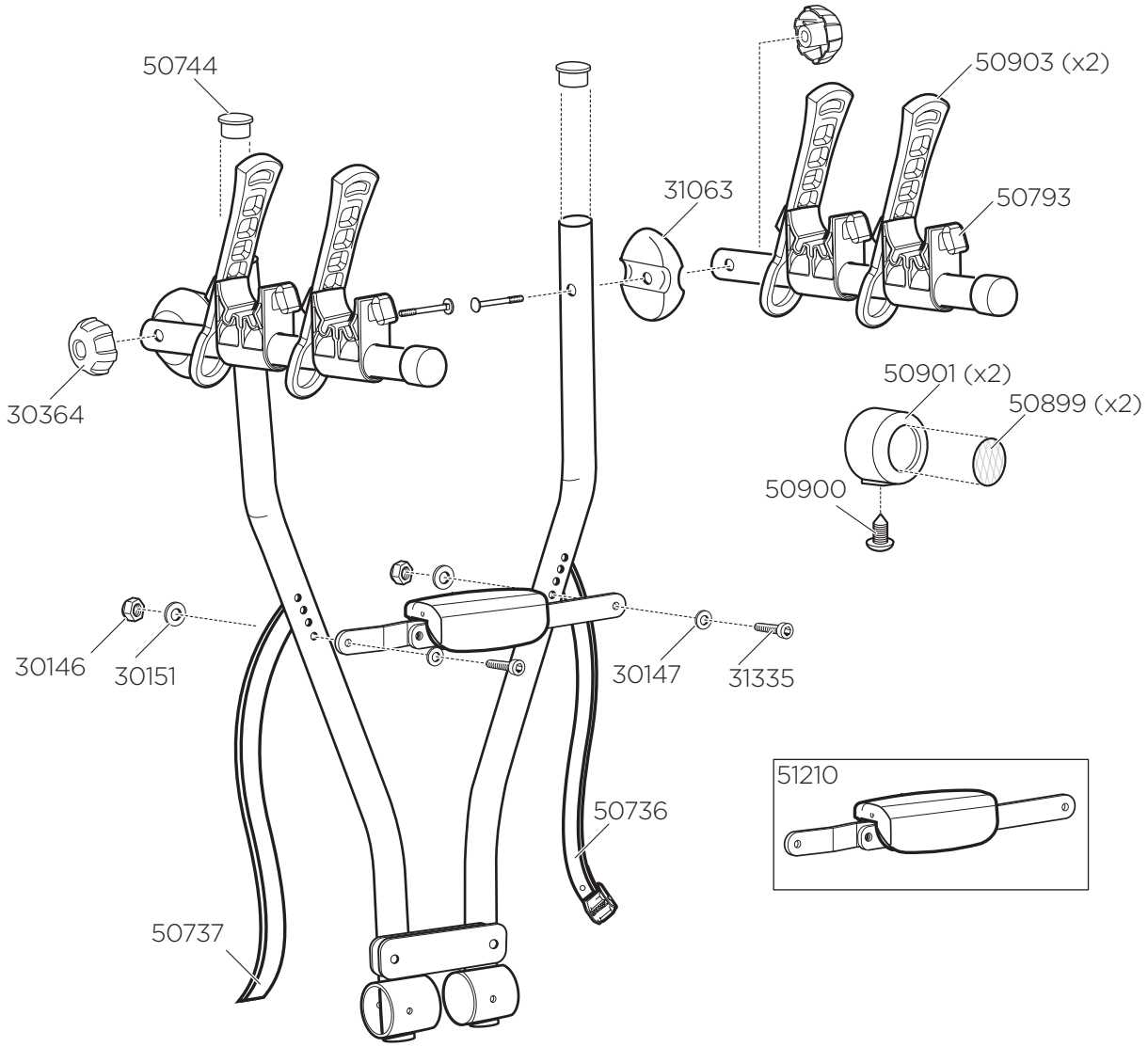
970