Thule RideOn

9503

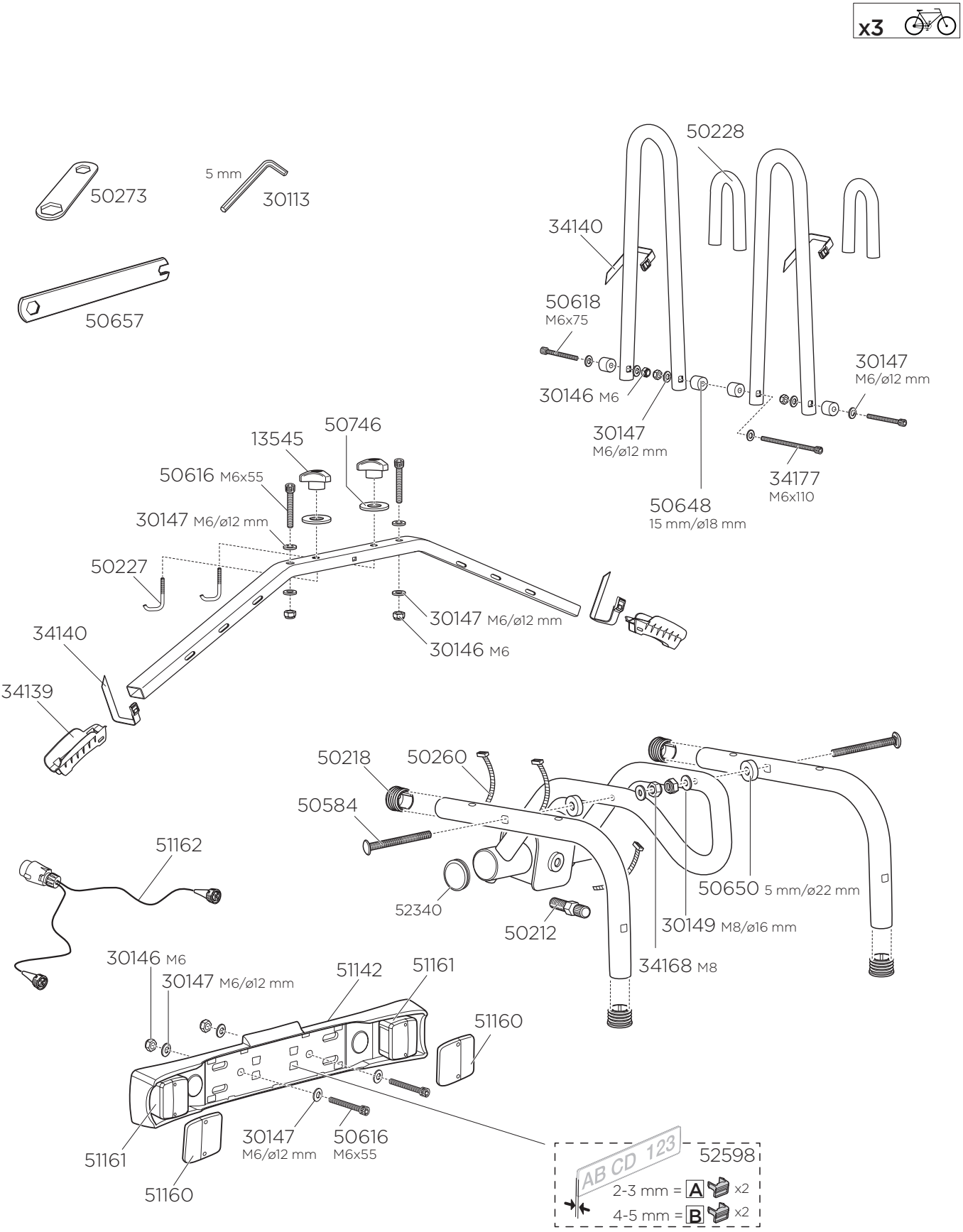

PART OF THULE GROUP