# Thule RideOn

**9502**

THULE SWEDEN
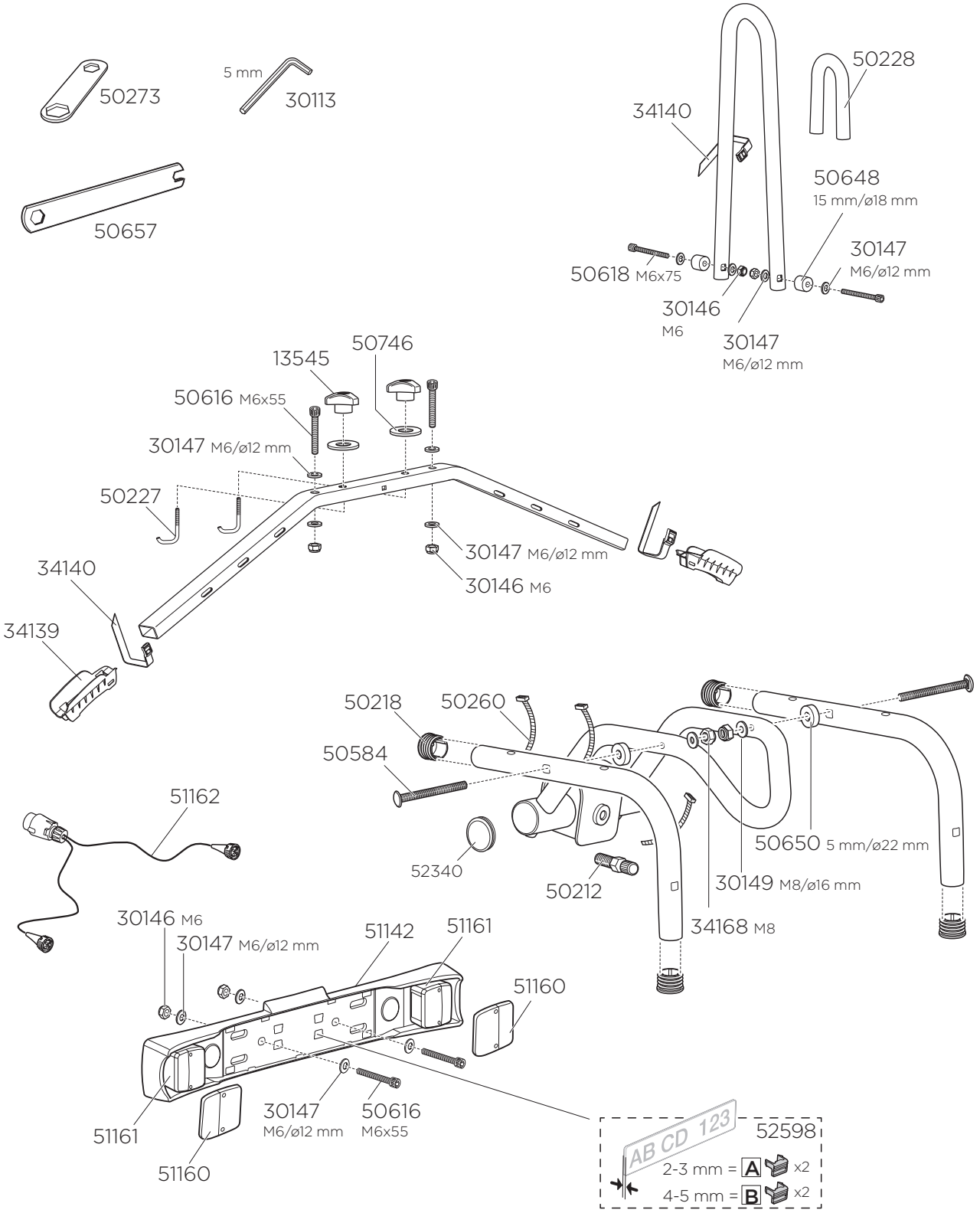
x2