Thule OutRide

561

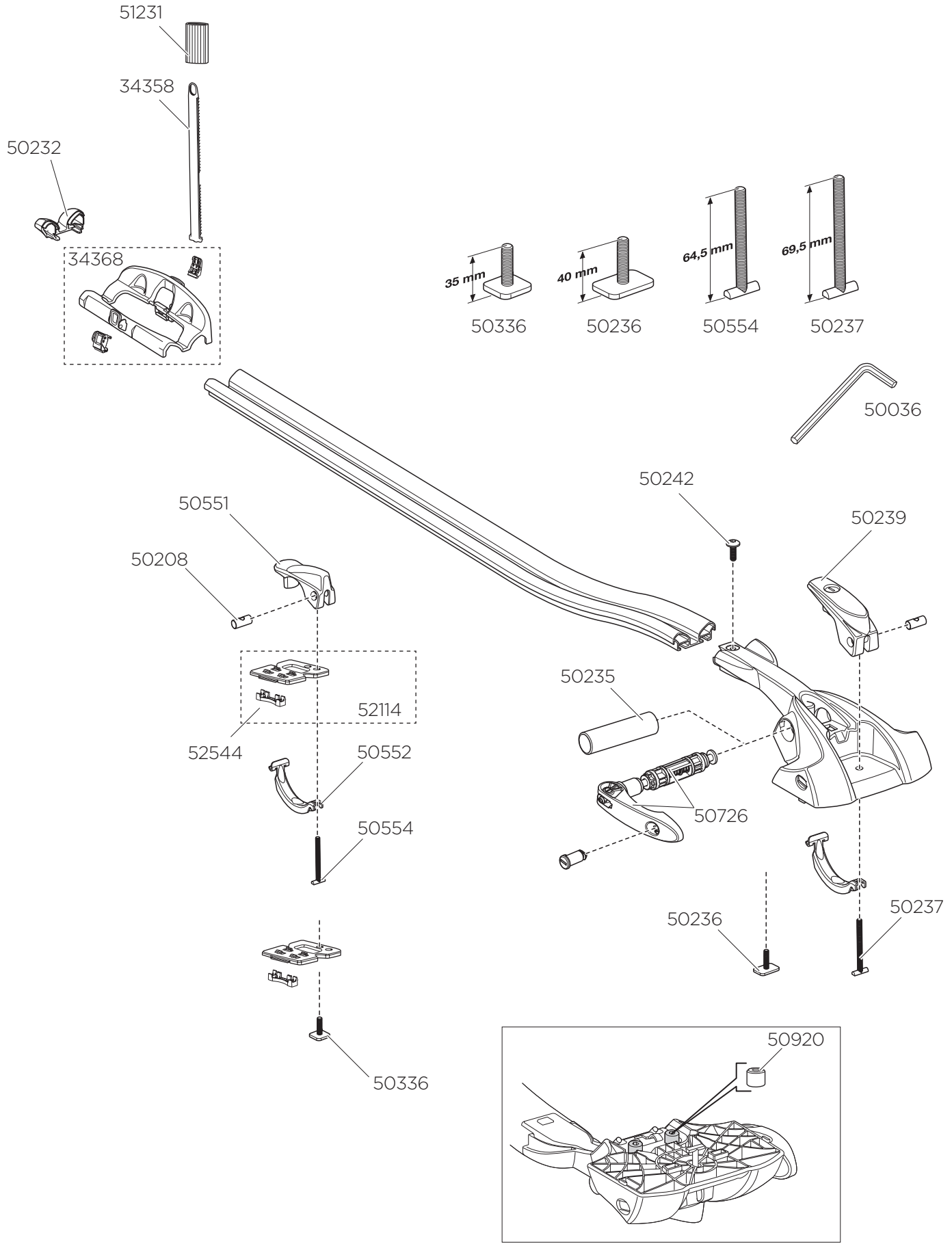

PART OF THULE GROUP