Thule hangOn
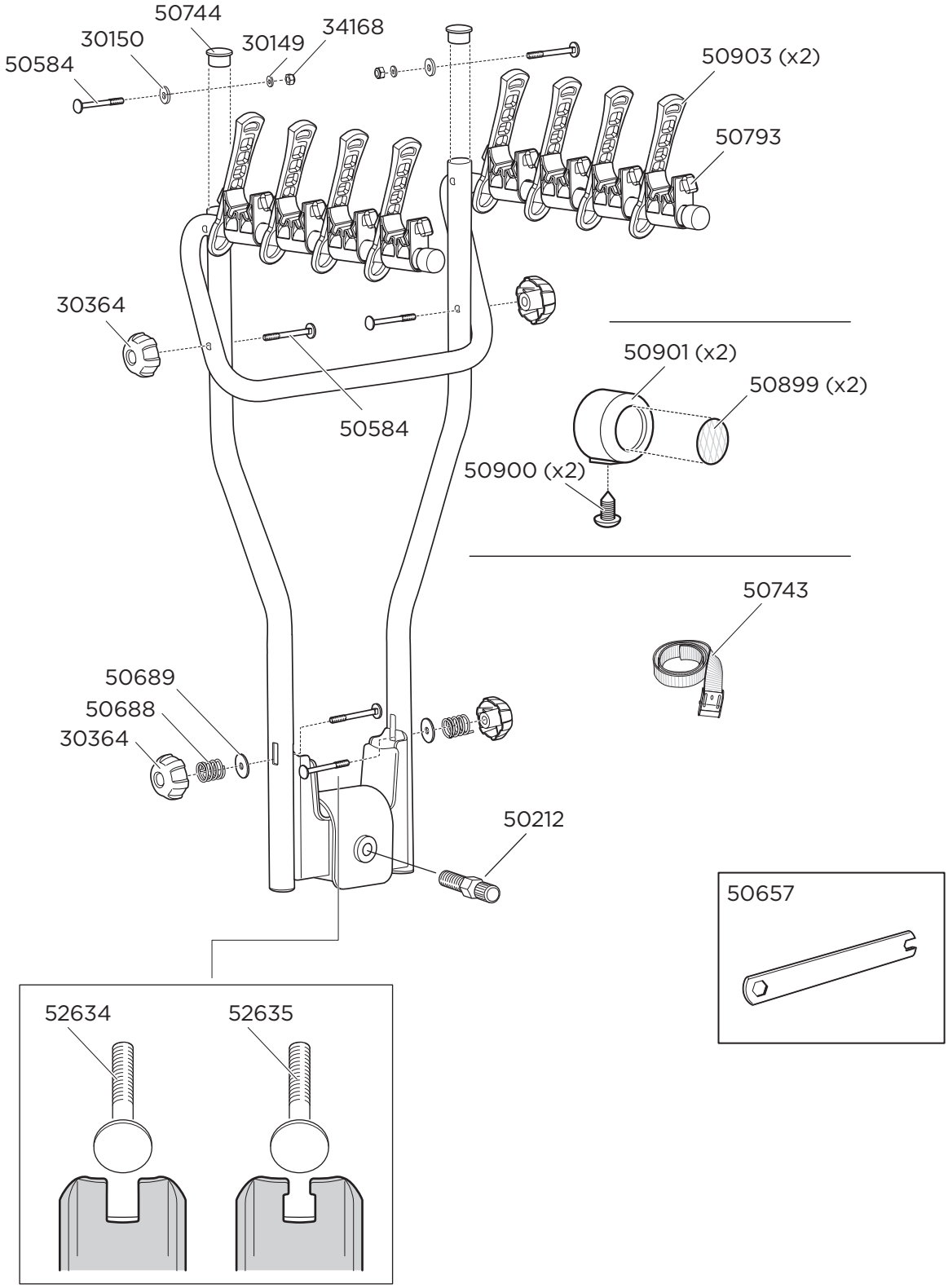
9708